ORIGINAL ON A1

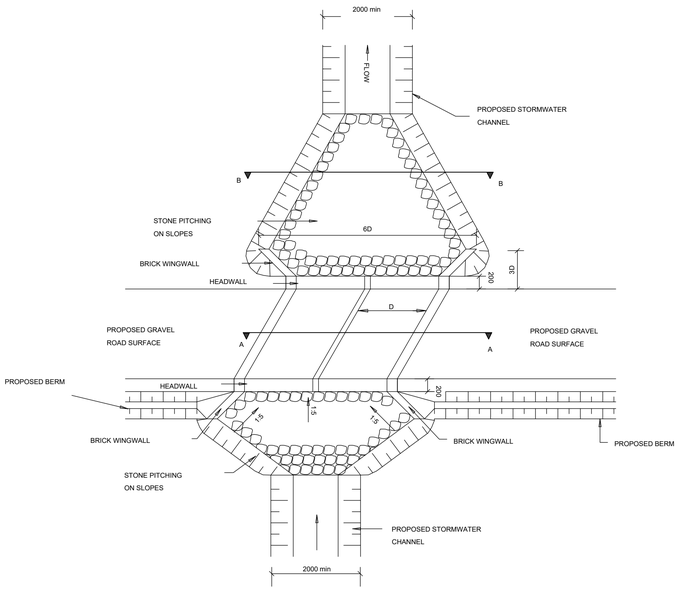

CULVERT LAYOUT

N.T.S.

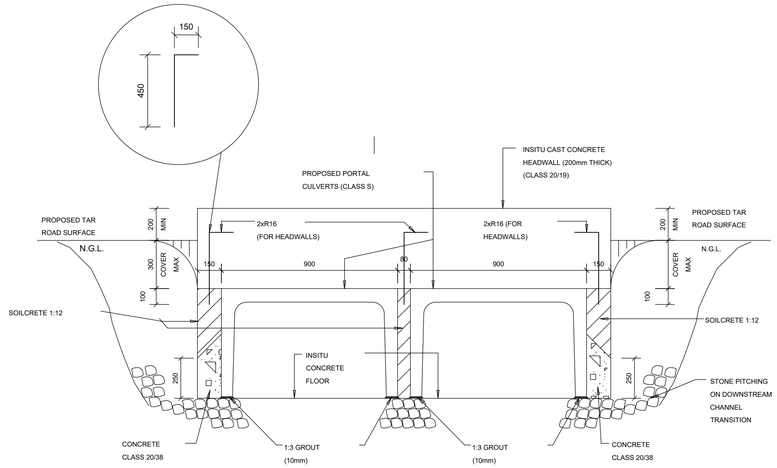

SECTION B-B

N.T.S.

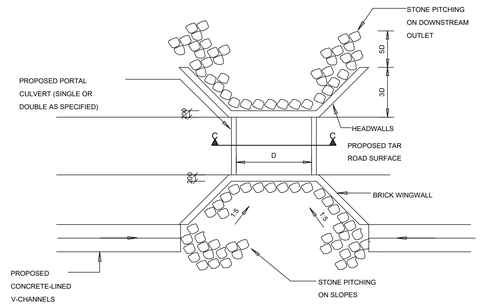

CULVERT DETAIL
WITH CHANNEL INLETS

N.T.S.

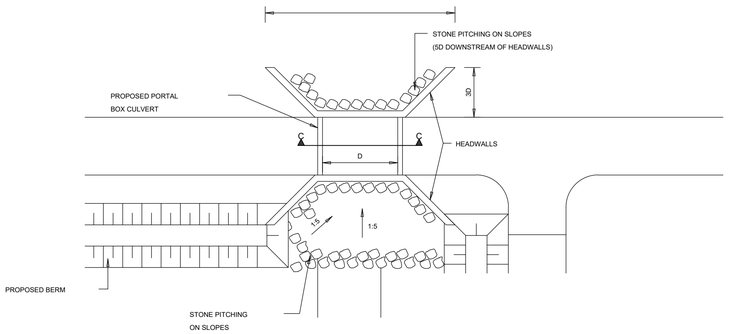

CULVERT LAYOUT

N.T.S.

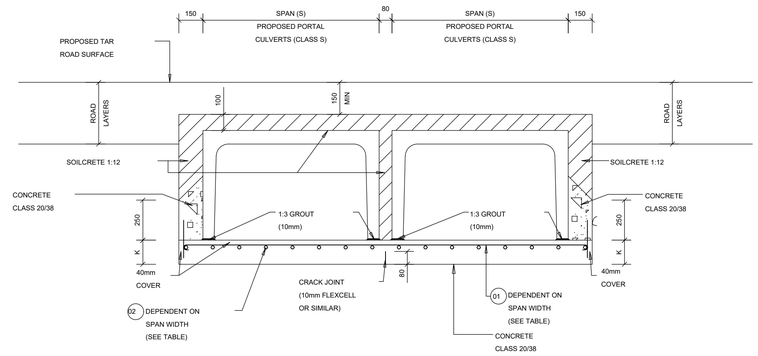

SECTION A-A

N.T.S.

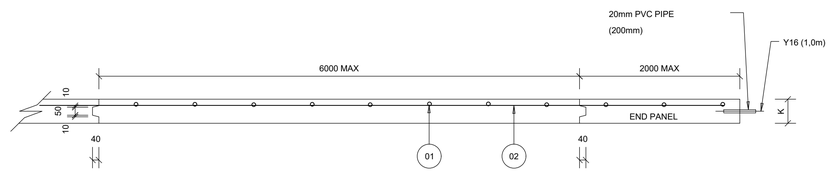

JOINTS BETWEEN FLOOR SLABS

N.T.S.

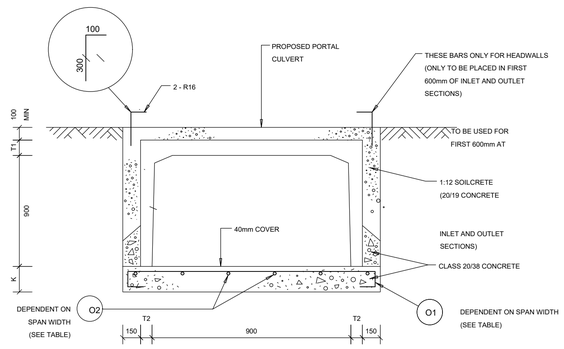

SECTION THROUGH SINGLE BOX CULVERT
(SECTION C-C)

N.T.S.

DETAILS OF INSITU CAST FLOORS

DIMENSIONS			REINFORCING	
S	BACK FILL HEIGHT	K	BAR O1	BAR O2
600	0m - 10m	160	Y12 @ 150	Y10 @ 250
750	0m - 8m	170	Y12 @ 150	Y10 @ 200
900	0m - 4m 4m - 8m	180 200	Y12 @ 150 Y12 @ 125	Y10 @ 150
1200	0m - 3m 3m - 6m	220 240	Y16 @ 225 Y16 @ 200	Y12 @ 300
1500	0m - 3m 3m - 5m	240 260	Y16 @ 200 Y16 @ 175	Y12 @ 200
1800	0m - 3m 3m - 5m	240 260	Y16 @ 200 Y16 @ 150	Y16 @ 200
2400	0m - 3m 3m - 5m	240 275	Y16 @ 175 Y16 @ 150	Y16 @ 200
3000	0m - 3m 3m - 5m	260 300	Y16 @ 150 Y20 @ 200	Y16 @ 150

COVER ON ALL REINFORCEMENT - 40mm

No.	DATE	REVISION	REVISED BY	DATE

DESIGNED BY

DESIGNED A.M.	CONSULTANT	RECOMMENDED
DESIGN CHECKED T.M.	..... for CONSULTING ENGINEER	..... for HEAD OF DEPARTMENT
DRAWN N.A	DATE:	DATE: .....
DRAWING CHECKED T.M.		

CLIENT

PRIVATE BAG X5066
THOHOYANDOU
0950

TEL : (015) 962 7500
FAX : (015) 962 4020

SCALE: AS SHOWN

REVISION: A

CLIENT: THULAMELA LOCAL MUNICIPALITY

TYPE OF PLANNING: TENDER DRAWINGS

PROJECT TITLE

DRAWING TITLE: STANDARD DETAIL

BID No.

SHEET 1 OF 1

DRAWING No. TLM-005